DiamondAir

INSTALLATION INSTRUCTIONS

PACKAGE HEAT PUMP & AIR CONDITIONER

FEATURING R-410A

14 SEER SERIES - (2-5Tons)

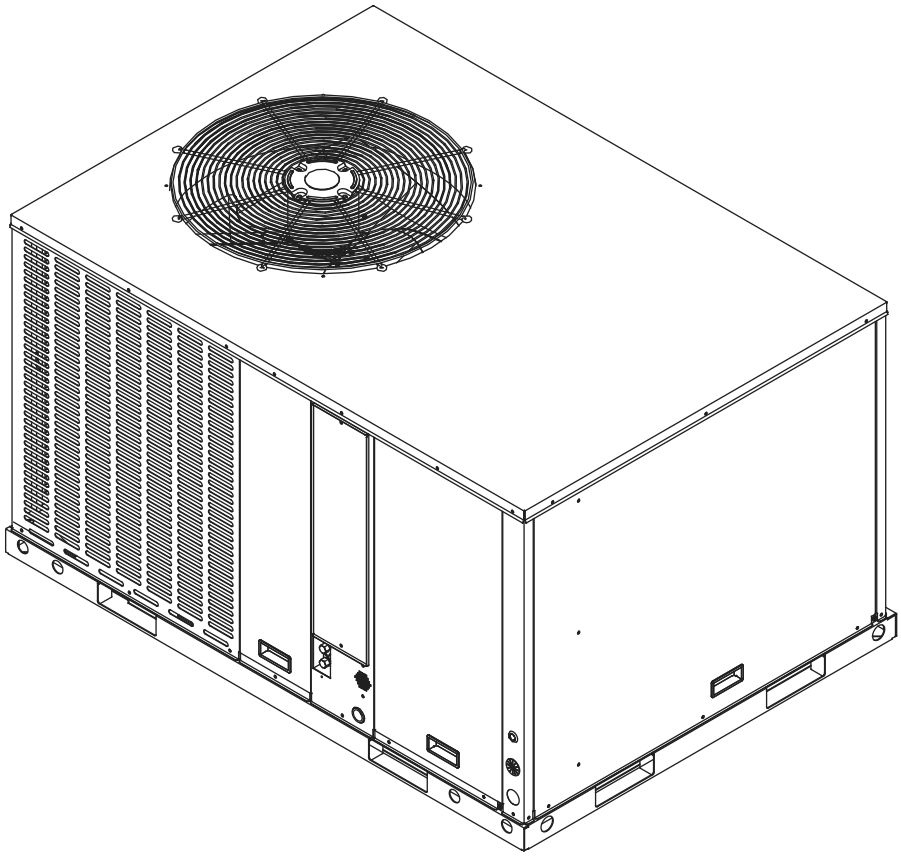

RECOGNIZE THIS SYMBOL AS AN INDICATION OF IMPORTANT SAFETY INFORMATION

WARNING

These instructions are intended as an aid to qualified, licensed service personnel for proper installation, adjustment and operation of this unit. Read these instructions thoroughly before attempting installation or operation. Failure to follow these instructions may result in improper installation, adjustment, service or maintenance possibly resulting in fire, electrical shock, property damage, personal injury or death.

C ETL LISTED US
Intertek

AHRI CERTIFIED®
www.ahridirectory.org
Unitary Small AC
AHRI Standard 210/240
Certification applies only when the complete system is listed with AHRI.

AHRI CERTIFIED®
www.ahridirectory.org
Unitary Small HP
AHRI Standard 210/240
Certification applies only when the complete system is listed with AHRI.

DO NOT DESTROY THIS MANUAL
Please read carefully and keep in a safe place for future reference by a serviceman.

TABLE OF CONTENTS

1.0 SAFETY....3
1.1 INSPECTION....4
1.2 LIMITATIONS....4
2.0 INSTALLATION....5
2.1 PRE-INSTALLATION....5
2.2 CLEARANCE....5
2.3 RIGGING AND HANDING....5
3.0 DUCTWORK....11
4.0 CONDENSATE DRAIN CONNECTION....11
4.1 INSTALL DRAIN PIPE....12
5.0 FILTERS....12
6.0 ELECTRICAL WIRING....12
6.1 POWER WIRING....12
6.2 GROUNDING....13
6.3 CONTROL WIRING....13
7.0 AIRFLOW PERFORMANCE....17
7.1 AIRFLOW PERFORMANCE DATA....17
8.0 SYSTEM OPERATION....24
8.1 COMPRESSOR CRANKCASE HEATER....24
8.2 PROTECTION....24
8.3 DEFROST MODE INSTUCTION....25
8.4 THERMOSTAT SIGNALS....26
9.0 OPERATION CHECK-UP....27
10.0 TROUBLE SHOOTING....27

LIST OF TABLES

TABLE 2-1 UNIT CLEARANCE....11
TABLE 6-1 14 SEER HEAT PUMP W/WITHOUT ELECTRIC HEAT....15
TABLE 6-2 14 SEER PHYSICAL DATA....16
TABLE 7-1 DUCT APPLICATION(208V)....17
TABLE 7-2 DUCT APPLICATION(230V)....18
TABLE 7-3 &7-4 & 7-5 REFRIGERANT CHARGE FOR H/P SYSTEM....20
TABLE 7-6 &7-7 & 7-8 REFRIGERANT CHARGE FOR H/P SYSTEM....21
TABLE 7-9 &7-10 & 7-11 REFRIGERANT CHARGE FOR H/P SYSTEM....22
TABLE 7-12 &7-13 & 7-14 REFRIGERANT CHARGE FOR H/P SYSTEM....23
TABLE 8-1 THERMOSTAT SIGNALS....26
TABLE 8-2 THERMOSTAT WIRE COLOR....26

LIST OF FIGURES

FIG. 2-1 COMPONENT LOCATION....6
FIG. 2-2 UNIT DIMENSIONS....7
FIG. 2-3 DIMENSIONS Back and Bottom....8
FIG. 2-4 UNIT DIMENSIONS....9
FIG. 2-5 DIMENSIONS Back and Bottom....10
FIG. 6-1 TYPICAL FIELD CONTROL WIRING DIAGRAM....14
FIG. 6-2 TYPICAL FIELD POWER WIRING DIAGRAM....14
HP SYSTEM WIRING DIAGRAM (24/42/48)....28
HP SYSTEM WIRING DIAGRAM (30/36/60)....29

This document is customer property and is to remain with this unit.
These instructions do not cover all the different variations of systems nor does it provide for every possible contingency to be met in connection with installation.
All phases of this installation must comply with NATIONAL, STATE and LOCAL CODES. If additional information is required please contact your local distributor.

1.0 SAFETY

When you see the symbols below on the labels or in the manuals, be alert to the potential or immediate hazards of personal injury, property and/or product damage. It is the owner's or installer's responsibility to comply with all safety instructions and information accompanying these symbols.

WARNING: This is a safety alert symbol indicating a potential hazardous situation, which could result in personal injury, property and/or product damage or death.

CAUTION: This is a safety alert symbol indicating a potential hazardous situation, which could result in moderate personal injury, property and/or product damage.

WARNING

These instructions are intended as an aid to qualified, licensed service personnel for proper installation, adjustment and operation of this unit. Read these instructions thoroughly before attempting installation or operation. Failure to follow these instructions may result in improper installation, adjustment, service or maintenance possibly resulting in fire, electrical shock, property damage, personal injury or death.

WARNING

The manufacturer's warranty does not cover any damage or defect to the heat pump caused by the attachment or use of any components, accessories or devices (other than those authorized by the manufacturer) into, onto or in conjunction with the heat pump. You should be aware that the use of unauthorized components, accessories or devices may adversely affect the operation of the heat pump and may also endanger life and property. The manufacturer disclaimer any responsibility for such loss or injury resulting from the use of such unauthorized components, accessories or devices.

WARNING

Disconnect all power to the unit before starting maintenance. Failure to do so can result in severe electrical shock or death.

WARNING

Do not, under any circumstances, connect return ductwork to any other heat producing device such as a fireplace insert, stove, etc. Unauthorized use of such devices may result in fire, carbon monoxide poisoning, explosion, property damage, severe personal injury or death.

WARNING

The unit must be permanently grounded. A grounding lug is provided. Failure to ground this unit can result in fire or electrical shock causing property damage, severe personal injury or death.

WARNING

Only electric heater kits supplied by this manufacturer as described in this publication have been designed, tested, and evaluated by a nationally recognized safety testing agency for use with this unit. Use of any other manufactured electric heaters installed within this unit may cause hazardous conditions resulting in property damage, fire, body injury or death.

WARNING

Proposition 65: This appliance contains fiberglass insulation. Respirable particles of fiberglass are known to the state of California to cause cancer.

CAUTION

Only use this unit in well-ventilated spaces and ensure that there are no obstructions that could impede the airflow into and out of the unit.
Do not use this unit in the following locations:

- Locations with mineral oil.
- Locations with saline atmospheres, such as seaside locations.
- Locations with sulphurous atmospheres, such as near natural hot springs.
- Where high voltage electricity is present, such as in certain industrial locations.
- On vehicles or vessels, such as trucks or ferry boats.
- Where exposure to oily or very humid air may occur, such as kitchens.
- In proximity to sources of electromagnetic radiation, such as high-frequency transmitters or other high strength radiation devices.

1.1 INSPECTION

As soon as unit is received, it should be inspected and noted for possible shipping damage during transportation. It is carrier's responsibility to cover the cost of shipping damage. Manufacturer or distributor will not accept the claims from dealer for any transportation damage.

1.2 LIMITATIONS

Refer to *Fig. 2-2, 2-3 , 2-4, 2-5* for unit physical data and to *Table 6-1 & 6-2* for electrical data.If components are to be added to a unit they must meet local codes, they are to be installed at the dealer's and /or the customer's expense. Size of unit for proposed installation should be based on heat loss / heat gain calculations made in accordance with industry recognized procedures identified by the Air Conditioning Contractors of America.

2.0 INSTALLATION

2.1 PRE-INSTALLATION

Before installation, carefully check the following:
1. Unit should be installed in accordance with national and local safety codes, including but not limit to ANSI/NFPS No. 70 or Canadian Electrical Code Part 1, C22.1, local plumbing and wastewater codes and any other applicable codes.
2. For rooftop installation, be sure the structure has enough strength to support the weight of unit. Unit should be installed on roof curb and leveled.
3. For ground level installation, a level slab should be used.
4. Condenser airflow should not be restricted.
5. On applications when a roof curb is used, the unit must be positioned on the curb so the front of the unit is tight against the curb.

2.2 CLEARANCE

All units require certain clearance for proper operation and service. Refer to *Table 2-1* for the clearances required for construction, servicing and proper unit operation.

2.3 RIGGING AND HANDING

Exercise care when moving the unit. Do not remove any packaging until the unit is near the place of installation. Rig the unit by attaching chain or cable slings to the lifting holes provided in the base rails. Spreader bars, whose length exceeds the largest dimension across the unit, MUST be used across the top of the unit.

CAUTION

Before lifting, make sure the unit weight is distributed equally on the rigging cables so it will lift evenly.

Units may be moved or lifted with a forklift. Slotted openings in the base rails are provided for this purpose.

CAUTION

All panels must be secured in place when the unit is lifted.
The condenser coils should be protected form rigging cable damage with plywood or other suitable material.

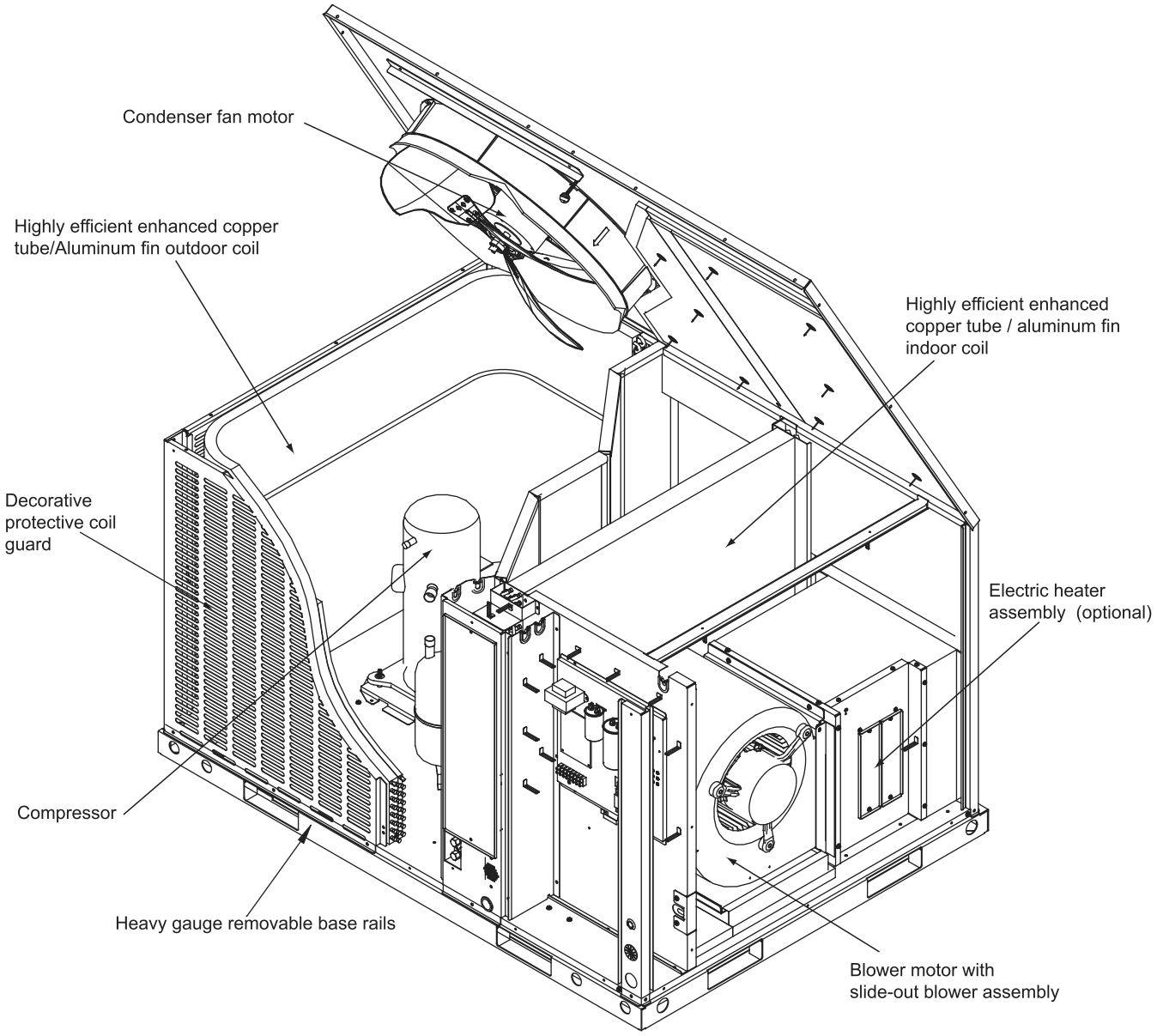

Fig. 2-1 Component Location

* The above figure for reference purpose only.

Unit size：024, 030, 036

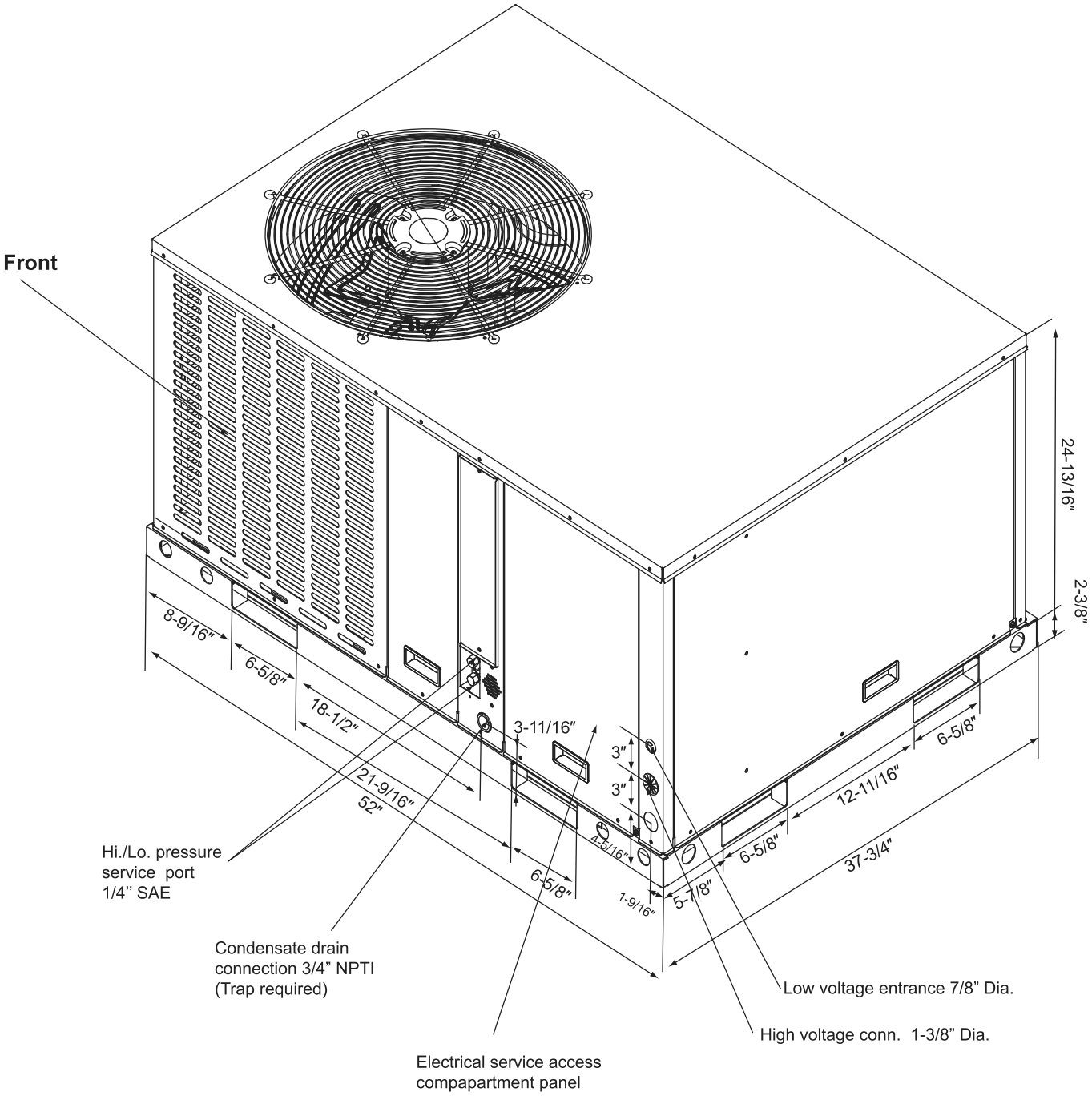

Fig. 2-2 Unit Dimensions

* The above figure for reference purpose only.

Unit size: 024, 030, 036

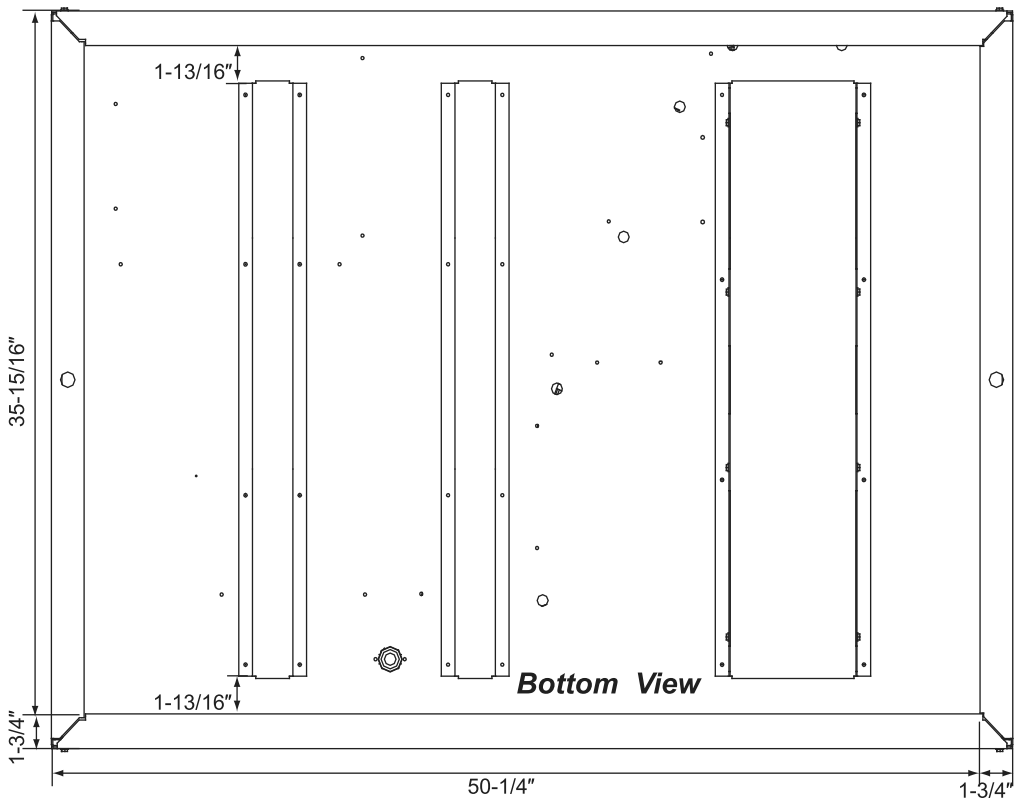

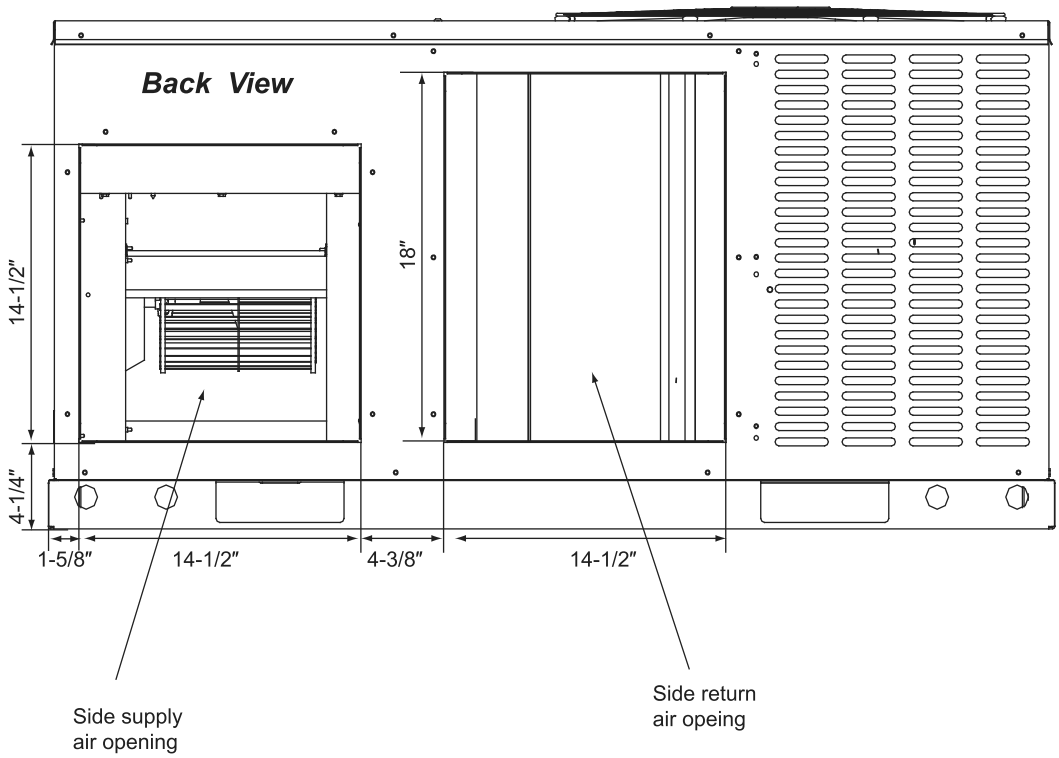

Fig. 2-3 Dimensions Back and Bottom

* The above figure for reference purpose only.

Unit size：042, 048, 060

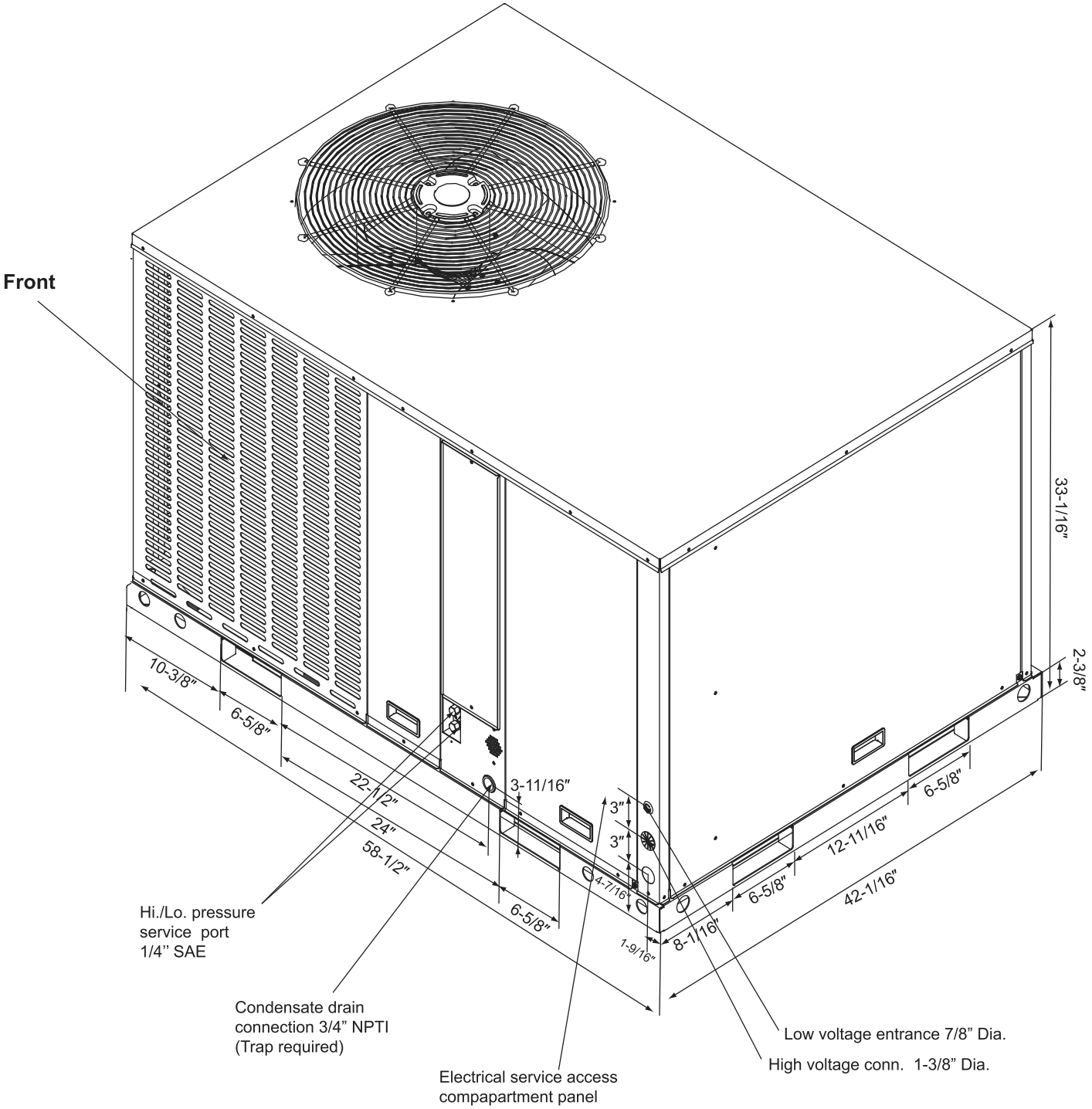

Fig. 2-4 Unit Dimensions

* The above figure for reference purpose only.

Unit size：042, 048, 060

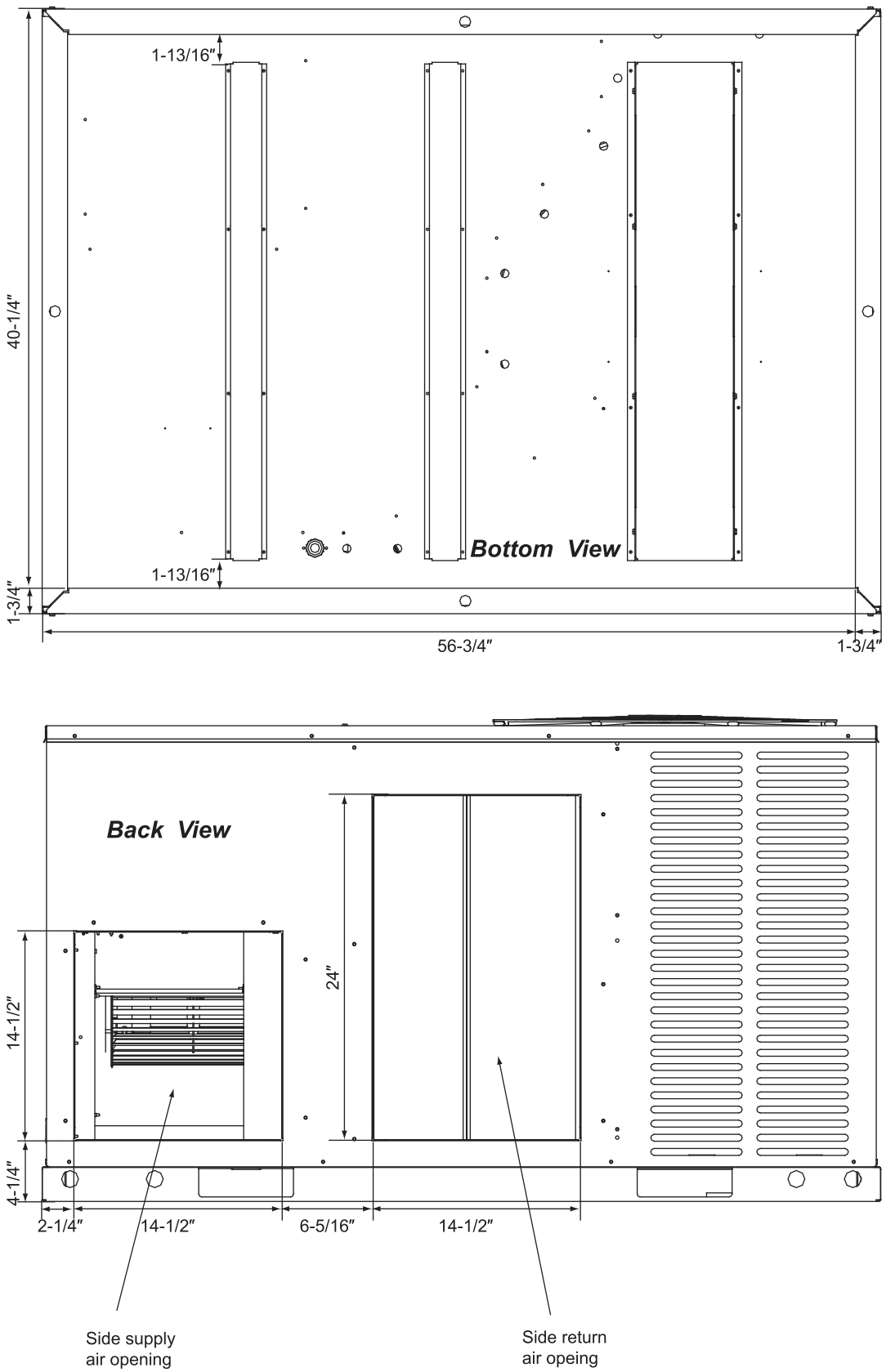

Fig. 2-5 Dimensions Back and Bottom

* The above figure for reference purpose only.

Table 2-1: Unit Clearance

Direction	Distance (in.)	Direction	Distance (in.)
Top[1]	60	Right	12
Front	30	Left	24
Rear	18[2]	Bottom[3]	0

Duct clearance: 1 inch clearance for all sides of air supply duct.
1. Units must be installed outdoors. Over hanging structure or shrubs should not obscure condenser air discharge outlet.
2. The minimum clearance without economizer/fresh air damper. For distance with economicer/fresh air damper, please refer to the installation instructions provided with the accessory.
3. Units may be installed on combustible floors made from wood or class A, B or C roof covering materials.

NOTE

For units applied with a roof curb, the minimum clearance may be reduced from 1 inch to 1/2 inch between combustible roof curb material and this supply air duct.

3.0 DUCTWORK

Ductwork should be sized and installed by the installing contractor in accordance with the Manual D from the Air Conditioning Contractors of America, and all national, state and local codes.

NOTE

On ductwork exposed to outside air space, use at least 2” of insulation and a vapor barrier. Flexible joint may be used to reduce noise.

A closed return duct system shall be used. This shall not preclude use of economizers or ventilation air intake. Flexible joints may be used in the supply and return duct work to minimize the transmission of noise.

CAUTION

When fastening duct work to the side duct flanges on the unit, insert the screws through the duct flanges only. DO NOT insert the screws through the casing. Outdoor duct work must be insulated and waterproofed.

NOTE

Be sure to note supply and return openings. Refer to Fig. 2-3 and 2-5 for information concerning supply and return air duct openings.

4.0 CONDENSATE DRAIN CONNECTION

Consult local codes for special requirements.
To provide extra protection from water damage, install an additional drain pan, provided by installer, under the entire unit with a separate drain line.
Manufacturer will not be responsible for any damages due to the failure to follow these requirements.

4.1 INSTALL DRAIN PIPE

1. Use the provided female NPT threaded fitting for outside connection and make sure that drain holes are not blocked.
2. Insulation may be needed for drain line to prevent sweating.
3. Drain pan has two drain connections on each side to provide flexibility of connection and drainage. Make sure proper pitch and plugging if second connection is not used.
4. Use a sealing compound on male pipe threads. Install the condensate drain line (NPT) to spill into an open drain.
5.Ensure a trap is included in the condensate drain line.

5.0 FILTERS

Units are shipped without a filter or filter racks. It is the responsibility of the installer to secure a filter in the return air ductwork or install a filter/frame Kit.

Filter must always be used and must be kept clean. Dirty filters may cause insufficient air delivery, decreasing unit efficiency and increasing operation costs and wear-and tear on the unit and controls.

Filters should be checked monthly; this is especially important since this unit is used for both heating and cooling.

6.0 ELECTRICAL WIRING

Field wiring must comply with the National Electric Code (NEC) or Canadian Electrical Code (CEC) and any applicable local ordinance.

WARNING

Disconnect all power to unit before installing or servicing. More than one disconnect switch may be required to de-energize the equipment. Hazardous voltage can cause severe personal injury or death.

6.1 POWER WIRING

1. Proper electrical power should be available at unit. Voltage tolerance should not be over 10% from rating voltage.
2. If any of the wire must be replaced, replacement wire must be the same type as shown in nameplate, wiring diagram and electrical data sheet.
3. Install a branch circuit disconnect of adequate size to handle starting current, located within sight of, and readily accessible to the unit.
4. ELECTRIC HEATER - If the Electric Heater is installed, unit may be equipped with 30~60A. circuit breakers or fuse. These breaker(s) protect the internal wiring in the event of a short circuit and serve as a disconnect. Circuit breakers installed within the unit do not provide over-current protection of the supply wiring and therefore may be sized larger than the branch circuit protection.

- Supply circuit power wiring must be 221 °F minimum copper conductors only. See Electrical Data in this section for ampacity, wire size and circuit protector requirements. Supply circuit protective devices may be either fuses or “HACR” type circuit breakers.
- 1-3/8” knockouts inside the cabinet are provided for connection of power wiring to electric heater.
- Power wiring is connected to the power terminal block in unit electric cabinet.

See Electrical Heater Installation Instruction for details.

6.2 GROUNDING

WARNING

The unit must be permanently grounded. Failure to do so can result in electrical shock causing personal injury or death.

- The unit must be electrically grounded in accordance with local codes or the national electric code.
- Grounding may be accomplished by attaching ground wire(s) to ground lug(s) provided in the unit wiring compartment.

6.3 CONTROL WIRING

IMPORTANT: Class 2 low voltage control wiring SHOULD NOT be run in conduit with main power wiring and must be separated from power wiring, unless class 1 wire of proper voltage rating is used.

- Low voltage control wiring should be 18 AWG color-coded. For lengths longer than 50 ft, 16 AWG wire should be used.
- Two 7/8” holes can be used for control wires going into the unit, one on left side and one at the bottom.
- Make sure, after installation, separation of control wiring and power wiring has been maintained.

Thermostat should be mounted on an inside wall about 58” from floor and will not be affected by unconditioned air, sun and/or heat exposure. Follow the instruction carefully because there are many wiring requirements.
See *Fig. 6-1 ~ 2, Table 6-1.*

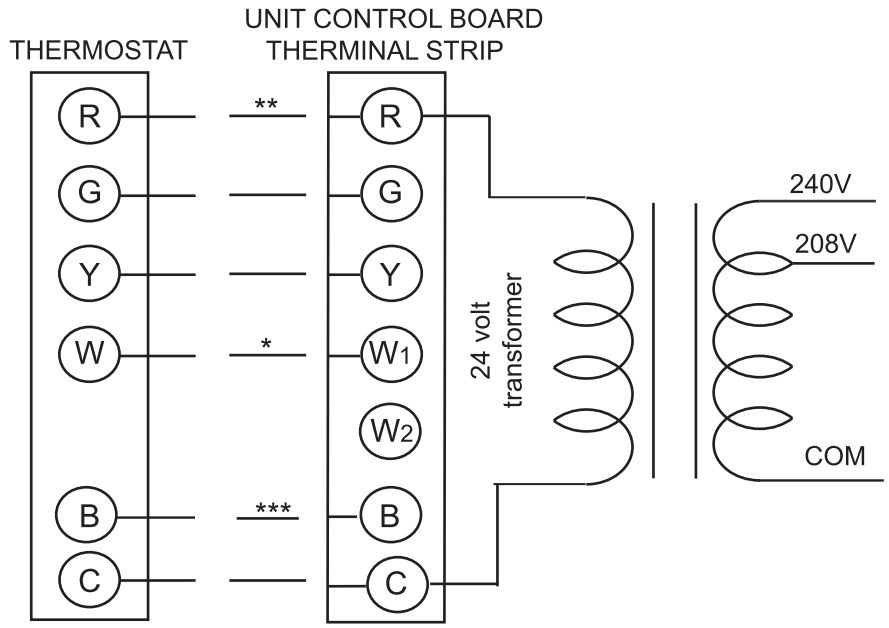

Fig. 6-1 Typical Field Control Wiring Diagram

*** B wire be used with heat pump system only, reversing valve energizes at the heating mode, and cut off at the cooling mode.

** Minimum wire size of 18 AWG wire should be used for all field installed 24 volt wire.

* Only required on units with supplemental electric heat.

CAUTION

Label all wire prior to disconnection when servicing controls. Wiring errors can cause improper and dangerous operation. Verify proper operation after servicing.

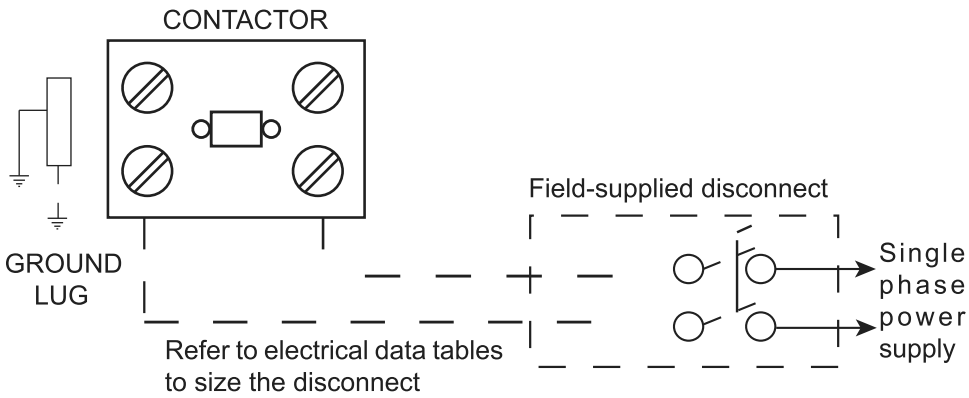

Fig. 6-2 Typical Field Power Wiring Diagram

Table 6-1: 14 SEER Heat Pump W/Without Electric Heat

Size (Tons)	Volt	Compressors (each)			OD Fan Motors (each)	Supply Blower Motor	Unit Circuit		Heater Circuit					
		RLA	LRA	MCC	FLA	FLA	MCA1 (Amps)	Max Fuse2/ Breaker3 Size(Amps)	Model	kW	Stages	Amps	MCA1 (Amps)	Max Fuse2/ Breaker3 Size(Amps)
24 (2.0)	208/230-1-60	8.45A	34.8A	14.87A	0.68A	2.46A	13.7	20	EHK-05G	3.8/5	1	18.1/20.8	23/26	25/30
									EHK-08G	5.6/7.5	1	27.1/31.3	34/39	35/40
									EHK-10G	7.5/10	1	36.1/41.7	45/52	45/60
30 (2.5)	208/230-1-60	12.0A	59.93A	21.7A	1.0A	4.1A	20.1	30	EHK-05G	3.8/5	1	18.1/20.8	23/26	25/30
									EHK-08G	5.6/7.5	1	27.1/31.3	34/39	35/40
									EHK-10G	7.5/10	1	36.1/41.7	45/52	45/60
									EHK-15G	11.3/15	2	54.2/62.5	68/78	70/80
36 (3.0)	208/230-1-60	13.0A	75A	22.9A	1.0A	4.1A	21.4	30	EHK-05G	3.8/5	1	18.1/20.8	23/26	25/30
									EHK-08G	5.6/7.5	1	27.1/31.3	34/39	35/40
									EHK-10G	7.5/10	1	36.1/41.7	45/52	45/60
									EHK-15G	11.3/15	2	54.2/62.5	68/78	70/80
42 (3.5)	208/230-1-60	15.2A	112.3A	24.8A	1.67A	2.8A	23.5	30	EHK-05G	3.8/5	1	18.1/20.8	23/26	25/30
									EHK-08G	5.6/7.5	1	27.1/31.3	34/39	35/40
									EHK-10G	7.5/10	1	36.1/41.7	45/52	45/60
									EHK-15G	11.3/15	2	54.2/62.5	68/78	70/80
									EHK-20G	15/20	2	72.2/83.3	90/104	90/110
48 (4.0)	208/230-1-60	17.3A	108A	28.5A	1.67A	3.6A	26.9	40	EHK-05G	3.8/5	1	18.1/20.8	23/26	25/30
									EHK-08G	5.6/7.5	1	27.1/31.3	34/39	35/40
									EHK-10G	7.5/10	1	36.1/41.7	45/52	45/60
									EHK-15G	11.3/15	2	54.2/62.5	68/78	70/80
									EHK-20G	15/20	2	72.2/83.3	90/104	90/110
60 (5.0)	208/230-1-60	21.5A	125A	34.3A	1.67A	6.0A	34.6	50	EHK-05G	3.8/5	1	18.1/20.8	23/26	25/30
									EHK-08G	5.6/7.5	1	27.1/31.3	34/39	35/40
									EHK-10G	7.5/10	1	36.1/41.7	45/52	45/60
									EHK-15G	11.3/15	2	54.2/62.5	68/78	70/80
									EHK-20G	15/20	2	72.2/83.3	90/104	90/110

024/030: Rotary compressor
036/042/048/060: Scroll compressor

1. Minimum Circuit Ampacity.
2. Maximum Over Current Protection per Standard UL 1995.
3. Fuse or HACR circuit breaker size installed at factory or field installed.

Table 6-2: 14 SEER Physical Data

Component	Models					
	24	30	36	42	48	60
Nominal Tonnage	2.0	2.5	3.0	3.5	4.0	5.0
ARI COOLING PERFORMANCE						
Gross Capacity @ ARI A point (Btu)	23,717	30,921	35,770	42,070	48,411	58,911
ARI net capacity (Btu)	22,800	30,000	34,200	40,500	46,500	57,000
EER	11	11	11	11	11	11
SEER	14	14	14	14	14	14
Nominal CFM	850	1050	1220	1400	1600	2000
System power (kW)	2.07	2.73	3.11	3.52	4.04	4.96
Refrigerant type	R410A	R410A	R410A	R410A	R410A	R410A
Refrigerant charge (lb-oz)	5-1	5-5	4-14	6-10	6-13	8-13
ARI HEATING PERFORMANCE						
47°F Capacity rating (Btu)	22,400	30,000	34,200	40,000	46,500	57,000
System power (kW)	1.75	2.38	2.62	3.24	3.64	4.44
17°F Capacity rating (Btu)	11,200	17,700	19,000	21,400	26,400	31,000
System power (kW)	1.47	2.36	2.44	2.70	3.36	3.82
HSPF (BTU/Watts-hr.)	8.0	8.0	8.0	8.0	8.0	8.0
DIMENSIONS (Inches)						
Length	52	52	52	58-1/2	58-1/2	58-1/2
Width	37-3/4	37-3/4	37-3/4	42-1/16	42-1/16	42-1/16
Height	24-13/16	24-13/16	24-13/16	33-1/14	33-1/16	33-1/16
OPERATING WT. (lbs)	326	346	351	463	463	479
COMPRESSORS						
Type	Rotary	Rotary	Scroll 1-spd	Scroll 1-spd	Scroll 1-spd	Scroll 1-spd
Quantity	1	1	1	1	1	1
CONDENSER COIL DATA						
Face area (Sq. Ft)	9.79	9.79	9.44	15.54	15.54	15.30
Rows	2.5	2.5	2.5	2	2	2.7
Fins per inch	20	20	21	21	21	20
Tube diameter(inch)	9/32	9/32	3/16	3/16	3/16	9/32
Circuitry type	interlaced	interlaced	interlaced	interlaced	interlaced	interlaced
EVAPORATOR COIL DATA						
Face area (Sq. Ft)	3.63	3.63	3.63	6.43	6.43	6.43
Rows	4	4	4	4	4	4
Fins per inch	17	17	17	17	17	17
Tube diameter(inch)	9/32	9/32	9/32	9/32	9/32	9/32
Circuitry type	interlaced	interlaced	interlaced	interlaced	interlaced	interlaced
Refrigerant control	Orifice	Orifice	Orifice	Orifice	Orifice	Orifice
CONDENSER FAN DATA						
Fan diameter (inch)	22	22	22	23-5/8	23-5/8	23-5/8
Type	Prop	Prop	Prop	Prop	Prop	Prop
Drive type	Direct	Direct	Direct	Direct	Direct	Direct
No. speeds	1	1	1	1	1	1
Number of motors	1	1	1	1	1	1
Motor HP each	1/8	1/6	1/6	1/3	1/3	1/3
RPM	1075	825	825	1075	1075	1075
Nominal total CFM	1960	2565	2565	3960	3960	3960
DIRECT DRIVE EVAP FAN DATA						
Quantity	1	1	1	1	1	1
Fan Size (Inch)	10×9	10×9	10×9	11×10-5/8	11×10-5/8	11×10-5/8
Type	Centrifugal	Centrifugal	Centrifugal	Centrifugal	Centrifugal	Centrifugal
No. speeds	3	3	3	3	3	3
Motor HP each	1/4	1/2	1/2	3/4	3/4	3/4
RPM	1075	1075	1075	1075	1075	1075
Motor frame size	48	48	48	48	48	48
FILTERS						
(No.) Size Recommended in.	(1) 22×14×1	(1) 22×14×1	(1) 22×14×1	(1) 22×14×1	(1) 22×14×1	(1) 22×14×1

7.0 AIRFLOW PERFORMANCE

Airflow performance data is based on cooling performance with a coil and no filter in place. Use this performance table for appropriate unit size, external static applied to unit and allow operation within the minimum and maximum limits shown in table below for both cooling and electric heat operation.

7.1 AIRFLOW PERFORMANCE DATA

Table 7-1 Duct Application(208v)

Model Number	Motor Speed	CFM(L/S)(Watts)								
		External Static Pressure-Inches W.C.[kPa]								
			0[0]	0.1[.02]	0.2[.05]	0.3[.07]	0.4[.10]	0.5[.12]	0.6[.15]	0.7[.17]
24	Low	CFM(L/S)	756(357)	706 (333)	654 (309)	600(283)				
		RPM	460	553	638	710				
		Watts	161	159	156	152				
		Amps	0.78	0.77	0.75	0.73				
	Middle	CFM(L/S)				842(397)	782(369)	718(339)	625(295)	
		RPM				776	831	884	930	
		Watts				228	220	213	203	
		Amps				1.1	1.06	1.03	0.99	
	High	CFM(L/S)						889(419)	805(380)	693(327)
		RPM						929	970	1004
		Watts						280	266	253
		Amps						1.37	1.32	1.26
30	Low	CFM(L/S)	1076(508)	1020 (481)	959 (453)	905(427)	837(395)			
		RPM	631	687	743	786	827			
		Watts	298	288	276	265	252			
		Amps	1.44	1.39	1.33	1.28	1.23			
	Middle	CFM(L/S)			1077 (508)	1008(476)	933(440)	848(400)	741(350)	
		RPM			784	822	858	890	921	
		Watts			330	317	302	285	267	
		Amps			1.60	1.55	1.47	1.41	1.34	
	High	CFM(L/S)				1137(537)	1063(502)	978(462)	859(405)	741(350)
		RPM				863	892	917	943	965
		Watts				388	370	350	327	304
		Amps				1.91	1.83	1.75	1.65	1.56
36	Low	CFM(L/S)	1170(525)	1143(539)	1110(524)	1070(505)	1021(428)			
		RPM	694	752	806	859	902			
		Watts	390	376	360	343	326			
		Amps	1.88	1.81	1.73	1.66	1.58			
	Middle	CFM(L/S)			1251(590)	1206(569)	1148(541)	1080(509)	989(466)	
		RPM			869	910	949	983	1017	
		Watts			436	416	392	368	340	
		Amps			2.11	2.01	1.91	1.8	1.68	
	High	CFM(L/S)				1345(634)	1272(600)	1192(562)	1107(522)	980(462)
		RPM				965	995	1022	1045	1070
		Watts				499	470	441	413	377
		Amps				2.43	2.31	2.18	2.07	1.91
42	Low	CFM(L/S)	1343(634)	1307(617)	1258(594)	1214(573)	1159(547)			
		RPM	604	660	720	770	825			
		Watts	393	382	372	362	348			
		Amps	1.89	1.85	1.81	1.77	1.71			
	Middle	CFM(L/S)			1434(677)	1383(653)	1328(627)	1264(597)	1087(513)	
		RPM			773	820	860	905	965	
		Watts			457	445	429	409	371	
		Amps			2.22	2.17	2.11	2.03	1.89	
	High	CFM(L/S)				1604(757)	1537(725)	1465(691)	1371(647)	1133(535)
		RPM				878	913	946	978	1028
		Watts				555	531	507	480	433
		Amps				2.75	2.66	2.56	2.46	2.28
48	Low	CFM(L/S)	1497(706)	1449(683)	1401(661)	1349(636)	1291(609)			
		RPM	676	722	773	816	853			
		Watts	457	448	437	426	413			
		Amps	2.26	2.22	2.18	2.14	2.08			
	Middle	CFM(L/S)			1571(741)	1511(713)	1445(681)	1370(646)	1249(589)	
		RPM			834	872	905	936	972	
		Watts			527	510	493	473	443	
		Amps			2.65	2.59	2.53	2.46	2.35	
	High	CFM(L/S)				1685(795)	1610(759)	1527(720)	1428(673)	1192(562)
		RPM				927	954	980	1003	1041
		Watts				626	604	580	556	510
		Amps				3.22	3.15	3.07	2.98	2.83

Table 7-1 Duct Application(208v) (Continued)

Model Number	Motor Speed	CFM(L/S)(Watts) External Static Pressure-Inches W.C.[kPa]								
			0[0]	0.1[.02]	0.2[.05]	0.3[.07]	0.4[.10]	0.5[.12]	0.6[.15]	0.7[.17]
60	Low	CFM(L/S)	1865(879)	1822(859)	1770(835)	1712(808)	1643(775)			
		RPM	851	886	919	948	974			
		Watts	641	620	598	578	555			
		Amps	3.08	2.98	2.88	2.79	2.69			
	Middle	CFM(L/S)			1875(884)	1808(853)	1729(816)	1642(774)	1542(727)	
		RPM			961	984	1005	1024	1043	
		Watts			664	639	613	587	558	
		Amps			3.21	3.11	3.0	2.89	2.78	
	High	CFM(L/S)				1905(898)	1826(861)	1736(819)	1615(762)	1479(698)
		RPM				1017	1034	1049	1063	1079
		Watts				703	677	648	619	585
		Amps				3.44	3.34	3.22	3.1	2.97

Table 7-2 Duct Application(230v)

Model Number	Motor Speed	CFM(L/S)(Watts) External Static Pressure-Inches W.C.[kPa]								
			0[0]	0.1[.02]	0.2[.05]	0.3[.07]	0.4[.10]	0.5[.12]	0.6[.15]	0.7[.17]
24	Low	CFM(L/S)	1005(475)	928(438)	868(410)	797(376)				
		RPM	611	677	729	782				
		Watts	252	250	248	246				
		Amps	1.1	1.09	1.08	1.07				
	Middle	CFM(L/S)				1038(490)	955(451)	846(400)	700(331)	
		RPM				860	895	935	976	
		Watts				374	370	362	354	
		Amps				1.66	1.65	1.63	1.6	
	High	CFM(L/S)						1004(474)	847(400)	604(285)
		RPM						975	1005	1036
		Watts						492	481	468
		Amps						2.26	2.22	2.17
30		CFM(L/S)	1227(579)	1185(560)	1150(543)	1122(530)	1085(512)	1055(498)	1024(484)	980(463)
		RPM	704	754	805	848	887	932	978	1018
		Watts	203	217	230	237	250	262	274	282
		Amps	1.6	1.7	1.8	1.9	1.95	2.03	2.12	2.18
36		CFM(L/S)	1411(666)	1365(645)	1330(628)	1298(613)	1265(597)	1236(584)	1205(569)	1174(554)
		RPM	802	844	886	924	961	997	1037	1075
		Watts	301	316	330	341	350	362	374	386
		Amps	2.29	2.38	2.48	2.56	2.62	2.7	2.79	2.91
42	Low	CFM(L/S)	1515(715)	1444(682)	1384(654)	1321(624)	1250(590)			
		RPM	674	727	773	816	855			
		Watts	495	476	458	440	421			
		Amps	2.15	2.07	2	1.92	1.85			
	Middle	CFM(L/S)			1559(736)	1490(704)	1416(669)	1335(630)	1239(585)	
		RPM			828	867	900	930	961	
		Watts			547	527	506	483	458	
		Amps			2.4	2.31	2.23	2.14	2.04	
	High	CFM(L/S)				1683(795)	1598(755)	1507(712)	1409(665)	1289(609)
		RPM				923	950	973	996	1020
		Watts				640	613	586	559	528
		Amps				2.84	2.72	2.61	2.51	2.38
48	Low	CFM(L/S)	1694(800)	1614(762)	1545(730)	1473(696)	1398(660)			
		RPM	735	781	820	857	888			
		Watts	521	504	487	471	454			
		Amps	2.33	2.28	2.22	2.17	2.12			
	Middle	CFM(L/S)			1717(811)	1642(775)	1560(737)	1466(692)	1363(644)	
		RPM			874	904	930	957	982	
		Watts			588	566	547	525	502	
		Amps			2.72	2.65	2.59	2.52	2.46	
	High	CFM(L/S)				1822	1722	1625	1515	1394
		RPM				955	977	996	1015	1034
		Watts				691	668	644	618	593
		Amps				3.3	3.23	3.15	3.08	3
60		CFM(L/S)	2001(945)	1954(923)	1907(900)	1860(878)	1814(857)	1768(835)	1724(814)	1681(794)
		RPM	846	885	927	966	1002	1035	1070	1102
		Watts	445	462	486	503	519	534	550	564
		Amps	3.24	3.35	3.5	3.61	3.71	3.8	3.9	3.99

* The above airflow data for reference only.

* In any stituation , the airflow of the unit should be in the range of 80% to 130% of 400CFM/Ton.

● The air distribution system has the greatest effect on airflow. The duct system is totally controlled by the contractor. For this reason, the contractor should use only industry-recognized procedures.

● Heat pump systems require a specified airflow. Each ton of cooling requires between 350 and 450 cubic feet of air per minute (CFM), or 400 CFM nominally.

● Duct design and construction should be carefully done. System performance can be lowered dramatically due to poor duct design.

● Air supply diffusers must be selected and located carefully. They must be sized and positoined to deliver treated air along the perimerter of the space. If they are too small for their intended airflow, they become noisy. If they are not located properly, they cause drafts. Reture air grilles must be properly sized to carry air back to the blower. If they are too small, they also cause noise.

● The installers should balance the air distribution system to ensure proper quiet airflow to all rooms in the home. This ensures a comfortable living space.

● An air velocity meter or airflow hood can give a reading of system CFM.

● During installation, installer should select the air speed according to the actual setting static pressure. Please refer to the *Table 7-1* AIRFLOW PERFORMANCE DATA.

Table 7-3 Refrigerant charge for H/P system

24 Cooling Mode Mode De Refroidissement			Cooling Charge Chart/Tableau De Charge de Refroidissement												
			Outdoor Ambient Temperature(°F)/Temperature Amdiante Exterieure(en °F)												
			55	60	65	70	75	80	85	90	95	100	105	110	115
			High Pressure Service Port (psig)/Vanne Détecté de Pression Haute(en psig)												
Low Pressure Service Port(psig)	Vanne Détectée de Pression Basse(en psig)	165			303	316	328	350	370	400	426	446	465	487	508
		161			300	313	325	346	366	394	421	440	459	481	503
		157			297	310	322	342	362	389	415	434	453	476	499
		153		282	294	307	319	339	358	384	410	428	446	471	496
		149		279	291	304	316	335	353	374	399	419	443	468	493
		145		275	287	300	312	331	349	370	393	416	440	465	490
		141	256	272	284	297	309	328	346	368	389	413	437	462	486
		137	251	268	280	293	305	324	343	365	386	410	434	459	483
		133	246	264	276	289	301	321	340	361	382	406	430	455	479
		129	241	260	272	285	297	317	336	357	378	403	427	451	475
		125	236	256	268	281	293	313	332	353	374	399	423	447	471
		121	231	252	264	277	289	309	328	349	370	395	420	444	467
		117	226	248	260	273	285	305	324	345	366	392	417	440	463
		113	221	244	256	269	281	301	320	341	362	388	414	437	459
		109	216	240	252	265	277	297	316	337	358	385	411	433	455
		105	211	236	248	261	273	293	312	333	354	381	408	429	450

Table 7-4 Refrigerant charge for H/P system

24 Heating Mode Mode De Chauffage			Heating Charge Chart/Tableau De Charge de Chauffage												
			Indoor Dry Bulb Temperature(°F)/Temperature Interieur au Themometre sec(en °F)												
			60	62	64	66	68	70	72	74	76	78	80	82	
			High Pressure Service Port(psig)/Vanne Détecté de Pression Haute(en psig)												
Low Pressure Service Port(psig)	Vanne Détectée de Pression Basse(en psig)	135	361	369	377	385	393	401	409	417	425	433	441	448	
		128	346	354	361	369	377	385	393	400	408	416	424	431	
		121	331	338	346	353	361	369	376	384	391	399	407	414	
		114	315	323	330	338	345	352	360	367	375	382	389	396	
		107	300	307	315	322	329	336	343	351	358	365	372	379	
		100	285	292	299	306	313	320	327	334	341	348	355	362	
		93	276	283	289	296	303	310	317	324	331	338	345	352	
		86	267	273	280	286	293	300	307	314	321	328	335	342	
		79	257	264	270	277	283	289	296	303	310	317	324	331	
		72	248	254	261	267	273	279	286	293	300	307	314	321	
		65	239	245	251	257	263	269	276	283	290	297	304	311	
		58					256	262	269	276	283	290	297	304	
		51						255	262	269	276	283	290	297	
		44							255	262	269	276	283	290	
		37								255	262	269	276	283	
		30													

Table 7-5 Refrigerant charge for H/P system

30 Cooling Mode Mode De Refroidissement			Cooling Charge Chart/Tableau De Charge de Refroidissement												
			Outdoor Ambient Temperature(°F)/Temperature Amdiante Exterieure(en °F)												
			55	60	65	70	75	80	85	90	95	100	105	110	115
			High Pressure Service Port(psig)/Vanne Détecté de Pression Haute(en psig)												
Low Pressure Service Port(psig)	Vanne Détectée de Pression Basse(en psig)	165			281	303	324	346	365	383	402	425	449	472	495
		161			279	301	322	344	363	381	400	423	447	470	493
		157			277	299	320	342	361	379	398	421	445	468	491
		153		253	275	297	318	340	359	377	396	419	443	466	489
		149		251	273	295	316	338	357	375	394	417	441	464	487
		145		249	271	293	314	336	355	373	392	415	439	462	485
		141	226	247	269	291	312	334	353	371	390	413	437	460	483
		137	224	245	267	289	310	332	351	369	388	411	435	458	481
		133	222	243	265	287	308	330	349	367	386	409	433	456	479
		129	220	241	263	285	306	328	347	365	384	407	431	454	477
		125	218	239	261	283	304	326	345	363	382	405	429	452	475
		121	216	237	259	281	302	324	343	361	380	403	427	450	473
		117	214	235	257	279	300	322	341	359	378	401	425	448	471
		113	212	233	255	277	298	320	339	357	376	399	423	446	469
		109	210	231	253	275	296	318	337	355	374	397	421	444	467
		105	208	229	251	273	294	316	335	353	372	395	419	442	465

Table 7-6 Refrigerant charge for H/P system

30 Heating Mode Mode De Chauffage		Heating Charge Chart/Tableau De Charge de Chauffage												
		Indoor Dry Bulb Temperature(°F)/Temperature Interieur au Themometre sec(en °F)												
		60	62	64	66	68	70	72	74	76	78	80	82	
		High Pressure Service Port(psig)/Vanne Détecté de Pression Haute(en psig)												
Low Pressure Service Port(psig) / Vanne Détectée de Pression Basse(en psig)	135	361	369	377	385	393	401	409	417	425	433	441	448	
	128	346	354	361	369	377	385	393	400	408	416	424	431	
	121	331	338	346	353	361	369	376	384	391	399	407	414	
	114	315	323	330	338	345	352	360	367	375	382	389	396	
	107	300	307	315	322	329	336	343	351	358	365	372	379	
	100	285	292	299	306	313	320	327	334	341	348	355	362	
	93	275	282	289	296	302	309	316	323	330	337	344	351	
	86	265	272	279	285	292	298	305	312	319	326	333	340	
	79	256	262	268	275	281	288	295	302	309	316	323	330	
	72	246	252	258	264	271	277	284	291	298	305	312	319	
	65	236	242	248	254	260	266	273	280	287	294	301	308	
	58					253	259	266	273	280	287	294	301	
	51						252	259	266	273	280	287	294	
	44							252	259	266	273	280	287	
	37								252	259	266	273	280	
	30													

Table 7-7 Refrigerant charge for H/P system

36 Cooling Mode Mode De Refroidissement		Cooling Charge Chart/Tableau De Charge de Refroidissement												
		Outdoor Ambient Temperature(°F)/Temperature Amdiante Exterieure(en °F)												
		55	60	65	70	75	80	85	90	95	100	105	110	115
		High Pressure Service Port(psig)/Vanne Détecté de Pression Haute(en psig)												
Low Pressure Service Port(psig) / Vanne Détectée de Pression Basse(en psig)	165			313	328	343	357	370	391	423	448	472	495	521
	161			309	324	339	353	366	387	419	444	468	491	516
	157			305	320	335	349	362	383	415	439	463	486	512
	153		286	301	316	331	345	358	379	411	435	459	482	508
	149		282	297	312	327	341	354	375	407	431	455	478	503
	145		278	293	308	323	337	350	372	404	428	451	474	500
	141	253	274	289	304	319	333	346	368	401	424	447	470	495
	137	246	268	283	298	313	328	342	363	397	421	444	471	501
	133	241	264	279	294	309	324	339	360	394	418	441	463	487
	129	236	260	275	290	305	321	337	358	391	415	438	461	486
	125	231	256	271	286	301	317	333	355	389	412	435	457	482
	121	226	252	267	282	297	313	329	351	386	409	432	454	478
	117	221	248	263	278	293	309	325	348	383	406	429	450	474
	113	216	244	259	274	289	305	321	344	380	403	426	447	470
	109	211	240	255	270	285	301	317	341	377	400	423	443	466
	105	206	236	251	266	281	297	313	337	374	397	420	440	462

Table 7-8 Refrigerant charge for H/P system

36 Heating Mode Mode De Chauffage		Heating Charge Chart/Tableau De Charge de Chauffage												
		Indoor Dry Bulb Temperature(°F)/Temperature Interieur au Themometre sec(en °F)												
		60	62	64	66	68	70	72	74	76	78	80	82	
		High Pressure Service Port(psig)/Vanne Détecté de Pression Haute(en psig)												
Low Pressure Service Port(psig) / Vanne Détectée de Pression Basse(en psig)	135	344	352	360	368	376	384	392	400	408	416	424	431	
	128	335	343	350	358	366	374	382	389	397	405	413	420	
	121	326	333	341	348	356	364	371	379	386	394	402	409	
	114	316	324	331	339	346	353	361	368	376	383	390	397	
	107	307	314	322	329	336	343	350	358	365	372	379	386	
	100	298	305	312	319	326	333	340	347	354	361	368	375	
	93	287	293	300	307	314	321	328	335	342	349	356	363	
	86	275	282	288	295	302	308	315	322	329	336	343	350	
	79	264	270	277	283	289	296	303	310	317	324	331	338	
	72	252	259	265	271	277	283	290	297	304	311	318	325	
	65	241	247	253	259	265	271	278	285	292	299	306	313	
	58					258	264	271	278	285	292	299	306	
	51						257	264	271	278	285	292	299	
	44							257	264	271	278	285	292	
	37								257	264	271	278	285	
	30													

Table 7-9 Refrigerant charge for H/P system

42 Cooling Mode Mode De Refroidissement			Cooling Charge Chart/Tableau De Charge de Refroidissement												
			Outdoor Ambient Temperature(°F)/Temperature Amdiante Exterieure(en °F)												
			55	60	65	70	75	80	85	90	95	100	105	110	115
			High Pressure Service Port(psig)/Vanne Détecté de Pression Haute(en psig)												
Low Pressure Service Port(psig)	Vanne Détectée de Pression Basse(en psig)	165			267	288	310	331	347	364	380	405	430	454	479
		161			265	286	308	329	345	362	378	403	428	452	477
		157			263	284	306	327	343	360	376	401	426	450	475
		153		240	261	282	304	325	341	358	374	399	424	448	473
		149		238	259	280	302	323	339	356	372	397	422	446	471
		145		236	257	278	300	321	337	354	370	395	420	444	469
		141	212	234	255	276	298	319	335	352	368	393	418	442	467
		137	210	232	253	274	296	317	333	350	366	391	416	440	465
		133	208	230	251	272	294	315	331	348	364	389	414	438	463
		129	206	228	249	270	292	313	329	346	362	387	412	436	461
		125	204	226	247	268	290	311	327	344	360	385	410	434	459
		121	202	224	245	266	288	309	325	342	358	383	408	432	457
		117	200	222	243	264	286	307	323	340	356	381	406	430	455
		113	198	220	241	262	284	305	321	338	354	379	404	428	453
		109	196	218	239	260	282	303	319	336	352	377	402	426	451
		105	194	216	237	258	280	301	317	334	350	375	400	424	449

Table 7-10 Refrigerant charge for H/P system

42 Heating Mode Mode De Chauffage			Heating Charge Chart/Tableau De Charge de Chauffage												
			Indoor Dry Bulb Temperature(°F)/Temperature Interieur au Themometre sec(en °F)												
			60	62	64	66	68	70	72	74	76	78	80	82	
			High Pressure Service Port(psig)/Vanne Détecté de Pression Haute(en psig)												
Low Pressure Service Port(psig)	Vanne Détectée de Pression Basse(en psig)	135	388	396	404	412	420	428	436	444	452	460	468	475	
		128	364	372	380	387	395	403	411	419	426	434	442	449	
		121	340	348	355	363	370	378	386	393	401	408	416	423	
		114	316	323	331	338	346	353	360	368	375	383	390	397	
		107	292	299	306	314	321	328	335	342	350	357	364	371	
		100	268	275	282	289	296	303	310	317	324	331	338	345	
		93	261	268	275	281	288	295	302	309	316	323	330	337	
		86	254	261	267	274	280	287	294	301	308	315	322	329	
		79	247	253	260	266	273	279	286	293	300	307	314	321	
		72	240	246	252	259	265	271	278	285	292	299	306	313	
		65	233	239	245	251	257	263	270	277	284	291	298	305	
		58					250	256	263	270	277	284	291	298	
		51						249	256	263	270	277	284	291	
		44							249	256	263	270	277	284	
		37								249	256	263	270	277	
		30													

Table 7-11 Refrigerant charge for H/P system

48 Cooling Mode Mode De Refroidissement			Cooling Charge Chart/Tableau De Charge de Refroidissement												
			Outdoor Ambient Temperature(°F)/Temperature Amdiante Exterieure(en °F)												
			55	60	65	70	75	80	85	90	95	100	105	110	115
			High Pressure Service Port(psig)/Vanne Détecté de Pression Haute(en psig)												
Low Pressure Service Port(psig)	Vanne Détectée de Pression Basse(en psig)	165			277	298	320	341	359	378	396	421	445	470	494
		161			275	296	318	339	357	376	394	419	443	468	492
		157			273	294	316	337	355	374	392	417	441	466	490
		153		250	271	292	314	335	353	372	390	415	439	464	488
		149		248	269	290	312	333	351	370	388	413	437	462	486
		145		246	267	288	310	331	349	368	386	411	435	460	484
		141	222	244	265	286	308	329	347	366	384	409	433	458	482
		137	220	242	263	284	306	327	345	364	382	407	431	456	480
		133	218	240	261	282	304	325	343	362	380	405	429	454	478
		129	216	238	259	280	302	323	341	360	378	403	427	452	476
		125	214	236	257	278	300	321	339	358	376	401	425	450	474
		121	212	234	255	276	298	319	337	356	374	399	423	448	472
		117	210	232	253	274	296	317	335	354	372	397	421	446	470
		113	208	230	251	272	294	315	333	352	370	395	419	444	468
		109	206	228	249	270	292	313	331	350	368	393	417	442	466
		105	204	226	247	268	290	311	329	348	366	391	415	440	464

Table 7-12 Refrigerant charge for H/P system

48 Heating Mode Mode De Chauffage		Heating Charge Chart/Tableau De Charge de Chauffage												
		Indoor Dry Bulb Temperature(°F)/Temperature Interieur au Themometre sec(en °F)												
		60	62	64	66	68	70	72	74	76	78	80	82	
		High Pressure Service Port(psig)/Vanne Détecté de Pression Haute(en psig)												
Low Pressure Service Port(psig) / Vanne Détectée de Pression Basse(en psig)	135	418	426	434	442	450	458	466	474	482	490	498	505	
	128	392	400	408	415	423	431	439	447	454	462	470	477	
	121	366	374	381	389	396	404	412	419	427	434	442	449	
	114	340	347	355	362	370	377	384	392	399	407	414	421	
	107	314	321	328	336	343	350	357	364	372	379	386	393	
	100	288	295	302	309	316	323	330	337	344	351	358	365	
	93	279	285	292	299	306	313	320	327	334	341	348	355	
	86	269	276	282	289	296	302	309	316	323	330	337	344	
	79	260	266	273	279	285	292	299	306	313	320	327	334	
	72	250	257	263	269	275	281	288	295	302	309	316	323	
	65	241	247	253	259	265	271	278	285	292	299	306	313	
	58					258	264	271	278	285	292	299	306	
	51						257	264	271	278	285	292	299	
	44							257	264	271	278	285	292	
	37								257	264	271	278	285	
	30													

Table 7-13 Refrigerant charge for H/P system

60 Cooling Mode Mode De Refroidissement		Cooling Charge Chart/Tableau De Charge de Refroidissement												
		Outdoor Ambient Temperature(°F)/Temperature Amdiante Exterieure(en °F)												
		55	60	65	70	75	80	85	90	95	100	105	110	115
		High Pressure Service Port(psig)/Vanne Détecté de Pression Haute(en psig)												
Low Pressure Service Port(psig) / Vanne Détectée de Pression Basse(en psig)	165			297	318	339	360	379	399	418	442	466	490	514
	161			295	316	337	358	377	397	416	440	464	488	512
	157			293	314	335	356	375	395	414	438	462	486	510
	153		270	291	312	333	354	373	393	412	436	460	484	508
	149		268	289	310	331	352	371	391	410	434	458	482	506
	145		266	287	308	329	350	369	389	408	432	456	480	504
	141	243	264	285	306	327	348	367	387	406	430	454	478	502
	137	241	262	283	304	325	346	365	385	404	428	452	476	500
	133	239	260	281	302	323	344	363	383	402	426	450	474	498
	129	237	258	279	300	321	342	361	381	400	424	448	472	496
	125	235	256	277	298	319	340	359	379	398	422	446	470	494
	121	233	254	275	296	317	338	357	377	396	420	444	468	492
	117	231	252	273	294	315	336	355	375	394	418	442	466	490
	113	229	250	271	292	313	334	353	373	392	416	440	464	488
	109	227	248	269	290	311	332	351	371	390	414	438	462	486
	105	225	246	267	288	309	330	349	369	388	412	436	460	484

Table 7-14 Refrigerant charge for H/P system

60 Heating Mode Mode De Chauffage		Heating Charge Chart/Tableau De Charge de Chauffage												
		Indoor Dry Bulb Temperature(°F)/Temperature Interieur au Themometre sec(en °F)												
		60	62	64	66	68	70	72	74	76	78	80	82	
		High Pressure Service Port(psig)/Vanne Détecté de Pression Haute(en psig)												
Low Pressure Service Port(psig) / Vanne Détectée de Pression Basse(en psig)	135	431	439	447	455	463	471	479	487	495	503	511	518	
	128	405	413	421	429	436	444	452	460	468	475	483	490	
	121	379	387	395	402	410	417	425	433	440	448	455	462	
	114	354	361	368	376	383	391	398	405	413	420	428	435	
	107	328	335	342	349	357	364	371	378	385	393	400	407	
	100	302	309	316	323	330	337	344	351	358	365	372	379	
	93	291	298	305	312	318	325	332	339	346	353	360	367	
	86	280	287	294	300	307	313	320	327	334	341	348	355	
	79	270	276	282	289	295	302	309	316	323	330	337	344	
	72	259	265	271	277	284	290	297	304	311	318	325	332	
	65	248	254	260	266	272	278	285	292	299	306	313	320	
	58					265	271	278	285	292	299	306	313	
	51						264	271	278	285	292	299	306	
	44							264	271	278	285	292	299	
	37								264	271	278	285	292	
	30													

8.0 SYSTEM OPERATION

8.1 COMPRESSOR CRANKCASE HEATER(OPTIONAL)

Refrigerant migration during the off cycle can result in a noisy start up. Add a crankcase heater to minimize refrigeration migration, and to help eliminate any start up noise or bearing “wash out”.
All heaters are located on the lower half of the compressor shell. Its purpose is to drive refrigerant from the compressor shell during long off cycles, thus preventing damage to the compressor during start-up.
At initial start-up or after extended shutdown periods, make sure the heater is energized for at least 12 hours before the compressor is started. (Disconnect switch on and wall thermostat off.)
The crankcase heater will start up or shut down according to the following logic:
The crankcase heater will start up when the compressor is off and T4<41°F.

The crankcase heater will shut down when T4 ≥ 45 °F

In any condition, the crankcase heater will shut down when the compressor is on

8.2 PROTECTION

8.2.1 Protection for HP system

If sensors(T3&T4) become open-circuit or short-circuit, the compressor ,outdoor fan motor and reversing valve circuit will shut down.
Discharge temperature protection:
If discharge temp. is > 275°F, the compressor will shut down, If discharge temp. is < 194°F, the compressor will resume operation.

High pressure protection
If high pressure is ＞638PSIG,the compressor and the outdoor fan motor will stop running.
If high pressure is ＜464PSIG,the compressor and the outdoor fan motor will resume running(3 minutes delay necessary).

Low pressure protection

When low pressure is ＜21PSIG,the compressor and the outdoor fan motor will stop running.

When low pressure is ＞44PSIG,the compressor and the outdoor fan motor will resume running(3 minutes delay necessary).

In stand-by status, if low pressure protection was detected, the compressor will not start.

If protection cycles occur four times within 30 minutes, the compressor and outdoor fan will shut down. In this condition, the system needs to power on once more in order to keep on working.

T4 function:

When T4 is < 5 °F, the compressor will stop. If the electrical heater kit is installed in the indoor unit, the outdoor unit will send the operation signal to the indoor unit. When T4 is > 10.4 °F, the compressor will restart .

8.3 DEFROST MODE INTRODUCTION (Heat pump only)

■ **Manual defrost mode**

To manually cycle the defrost mode, set switch SW3-1 to the “ON” position (See Fig 11). The system will engage a defrost cycle, and automatically exit defrost mode once the **Shut-down conditions of defrost mode** described below are met.

Caution: Once the manual defrost mode is finished, please set switch SW3-1 back to “OFF”.

■ **Start-up conditions of defrost mode:**

When SW3-3 switch is set to “ON”(See Fig 11), the system will perform a defrost cycle in any of the following conditions:

1. If the compressor is operating and T3 is < 30.2 °F, the system will perform a defrost cycle every 30 minutes of operation.
2.When T3 is < 28.4 °F and the compressor is operating for the first time after being connected power.
3. When T3 is < 28.4 °F and The system has been in standby for two hours .

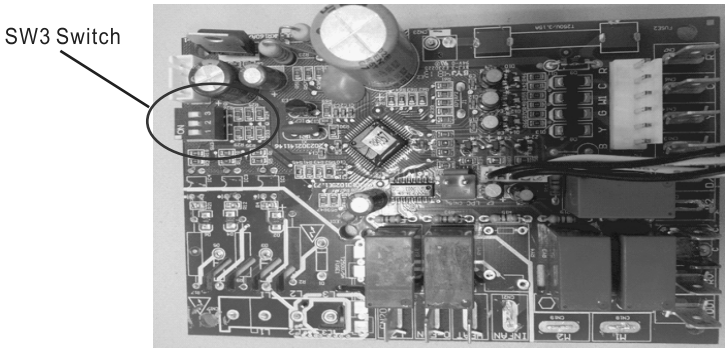

Fig.11 SW3 Switch Location in the PCB Board

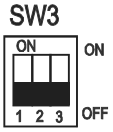

SW3-1	ON	MANUAL DEFROST
	OFF	AUTOMATIC DEFROST
SW3-2	ON	RESERVED
	OFF	NORMAL DEFROST
SW3-3	ON	DEFROSTING CYCLE:30MIN
	OFF	DEFROSTING CYCLE:60MIN

When SW3-3 switch is set to “OFF”(See in Fig 11), the system will perform a defrost cycle in any of the following conditions:

1. If the compressor is operating and T3 is < 30.2 °F, the system will perform a defrost cycle every 60 minutes of operation.
2.When T3 is < 28.4 °F and the compressor is operating for the first time after being connected power.
3. When T3 is < 28.4 °F and the system has been in standby for two hours .

■ **Shut-down conditions of defrost mode:**
No matter what defrost mode is selected, the defrost cycle will end in any of the following conditions:
1. The defrost cycle has been running for 10 minutes;
2. T3 is ≥ 77 °F and T4 ≥ 28.4 °F;
3. The compressor stops operating;
4. T3 is ≥ 77 °F for more than 60s when T4 < 28.4 °F.

8.4 THERMOSTAT SIGNALS

Table 8-1: Thermostat Signals

Signal	State	Board Function
G	ON	Blower instant ON
	OFF	Blower 90 sec. delay OFF
G & W1	ON	Blower instant ON Heater bank 1 elec.onstant ON
	OFF	Heater bank 1 elec.instant OFF Blower 90 sec. delay OFF
G & W & W2	ON	Blower instant ON Heater 1 instant ON Heater 2 instant ON
	OFF	Blower 90 sec. delay OFF Heater 1 instant OFF Heater 2 instant OFF
G & Y	ON	Blower instant ON Compressor and outdoor fan instant ON
	OFF	Compressor and outdoor fan instant OFF Blower fan delay 90 sec. OFF
G & B & Y	ON	Blower instant ON Compressor and outdoor fan instant ON 4-way valve instant ON
	OFF	Compressor and outdoor fan instant OFF Blower fan delay 90 sec. OFF 4-way valve instant OFF
G & B & Y & W1	ON	Blower instant ON Compressor and outdoor fan instant ON 4-way valve instant ON Heater 1 instant ON
	OFF	Blower fan delay 90 sec. OFF Compressor and outdoor fan instant OFF 4-way valve instant OFF Heater 1 instant OFF
G & B & Y & W1 & W2	ON	Blower instant ON Compressor and outdoor fan instant ON 4-way valve instant ON Heater 1 instant ON Heater 2 instant ON
	OFF	Blower fan delay 90 sec. OFF Compressor and outdoor fan instant OFF 4-way valve instant OFF Heater 1 instant OFF Heater 2 instant OFF

Table 8-2: Thermostat Wire Color

Thermostat Wire Color	Function
Red	Power wire
Black	Power wire
White	Heater signal 1
Green	Blower fan signal
Yellow	Compressor signal
Blue	Reversing valve signal
White/Black	Heater signal 2

9.0 OPERATION CHECK-UP

- **Cooling Startup**
  1. Turn thermostat to OFF and turn power to ON
  2. Turn ON thermostat and set as high as possible
  3. Turn Fan switch ON and indoor blower should run
  4. Turn fan switch to AUTO, system switch to COOL and thermostat tem perature setting below room temperature.
     Unit should run in COOLING mode.
- **Heating Startup**

  After normal cooling run
  1. Turn thermostat switch to HEAT. After unit stops, wait about 5 minutes.
  2. Turn thermostat setting above room temperature.
     Unit should run in HEATING mode.

  After unit has run for a while, check the following:
  1. Are fans running properly?
  2. Is compressor running correctly?
  3. Check refrigerant charge.
  4. Check duct connection for leaks.
  5. Check for tubing and sheet metal rattles.

(See Wiring Diagram for electric connection detail.)

10.0 TROUBLE SHOOTING

⚠	**WARNING**
Component trouble shooting requires opening control box with power on. Use extreme care while working on this condition. Check nameplate and this instruction when making wire connections.	

HP System Wiring Diagram (24/42/48):

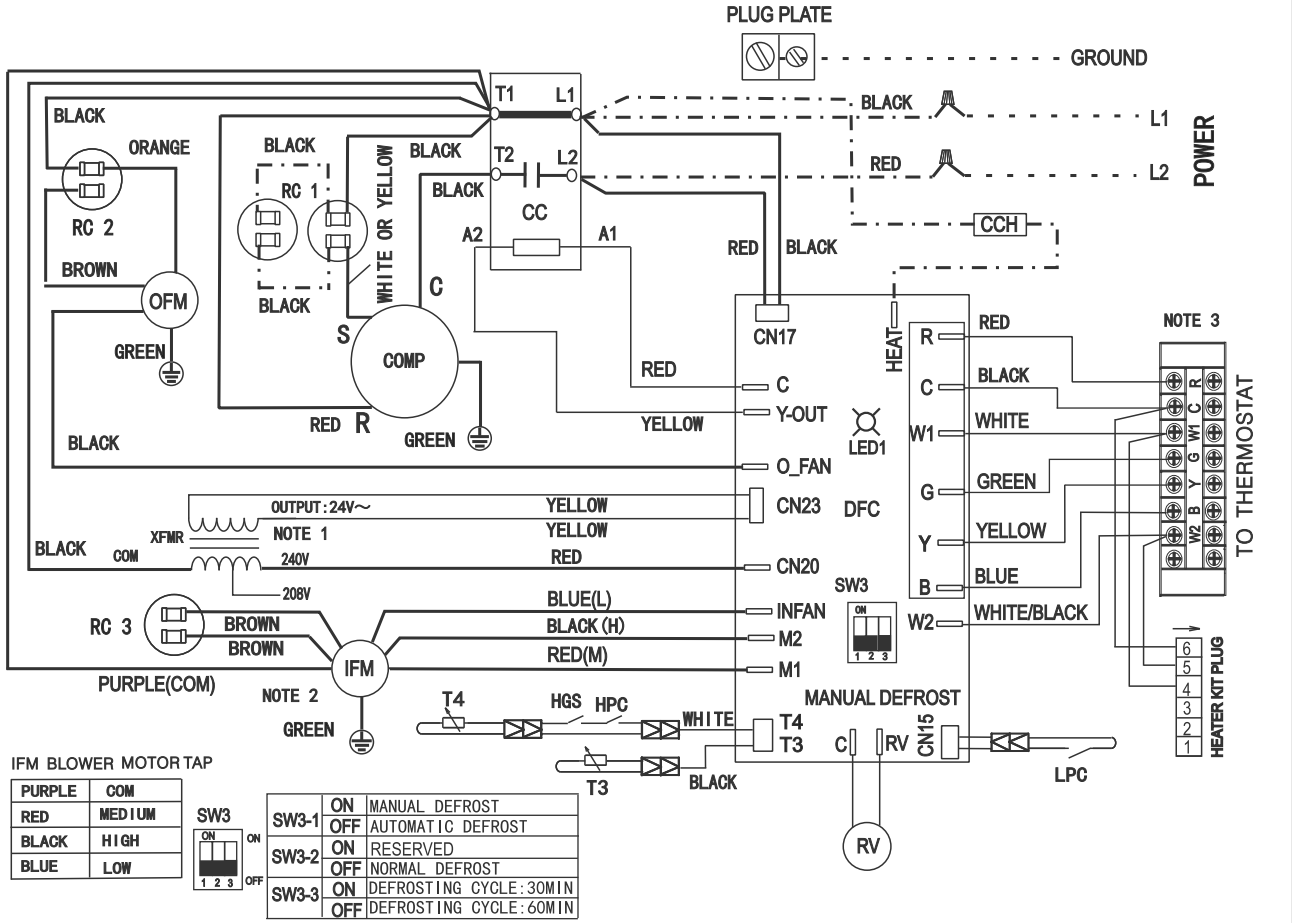

IFM BLOWER MOTOR TAP

PURPLE	COM
RED	MEDIUM
BLACK	HIGH
BLUE	LOW

SW3

SW3-1	ON	MANUAL DEFROST
	OFF	AUTOMATIC DEFROST
SW3-2	ON	RESERVED
	OFF	NORMAL DEFROST
SW3-3	ON	DEFROSTING CYCLE:30MIN
	OFF	DEFROSTING CYCLE:60MIN

NOTES:
1: Remove the red lead from "240V" terminal and then connect the red lead to "208V" terminal on the transformer for 208 volts.
2: Exchange the indoor blower motor red wire and blue wire for medium speed ;exchange the blower motor black wire and blue wire for high speed; default as low speed of factory settings.
3: "W2" wire is not provided in some models.

CC COMPRESSOR CONTACTOR
CCH CRANKCASE HEATER
COMP COMPRESSOR
DFC DEFROST CONTROL
T4 AMBIENT TEMPERATURE
T3 PIPE TEMPERATURE
HPC HIGH PRESSURE CUT-OUT CONTROL
LPC LOW PRESSURE CUT-OUT CONTROL
OFM OUTDOOR FAN MOTOR
RC 1 COMPRESSOR RUN CAPACITOR
RC 2 OUTDOOR FAN MOTOR RUN CAPACITOR
RC 3 INDOOR FAN MOTOR RUN CAPACITOR
RV REVERSING VALVE
GND GROUND CHASSIS
HGS HOT GAS OR COMPRESSOR TOP SENSOR
IFM INDOOR FAN MOTOR

LINE VOLTAGE
FACTORY STANDARD
FIELD INSTALLED
FACTORY OPTIONAL

LOW VOLTAGE
FACTORY STANDARD
FIELD INSTALLED
FACTORY OPTIONAL

USE COPPER CONDUCTORS ONLY
WARNING :
CABINET MUST BE PERMANENTLY GROUNDED AND ALL WIRING TO CONFORM TO I.E.C, N.E.C, C.E.C, C.L.C, AND LOCAL CODES AS APPLICABLE REPLACEMENT WIRE MUST BE THE SAME GAUGE AND INSULATION TYPE AS ORIGINAL WIRE.

0 STEADY ON = NORMAL OPERATION
● OFF = DFC FAILURE
1 1 FLASH = T3 SENSOR FAILURE
2 2 FLASH = T4 SENSOR FAILURE / HPC OR HGS OPEN
3 3 FLASH = LPC OPEN

HP System Wiring Diagram (30/60):

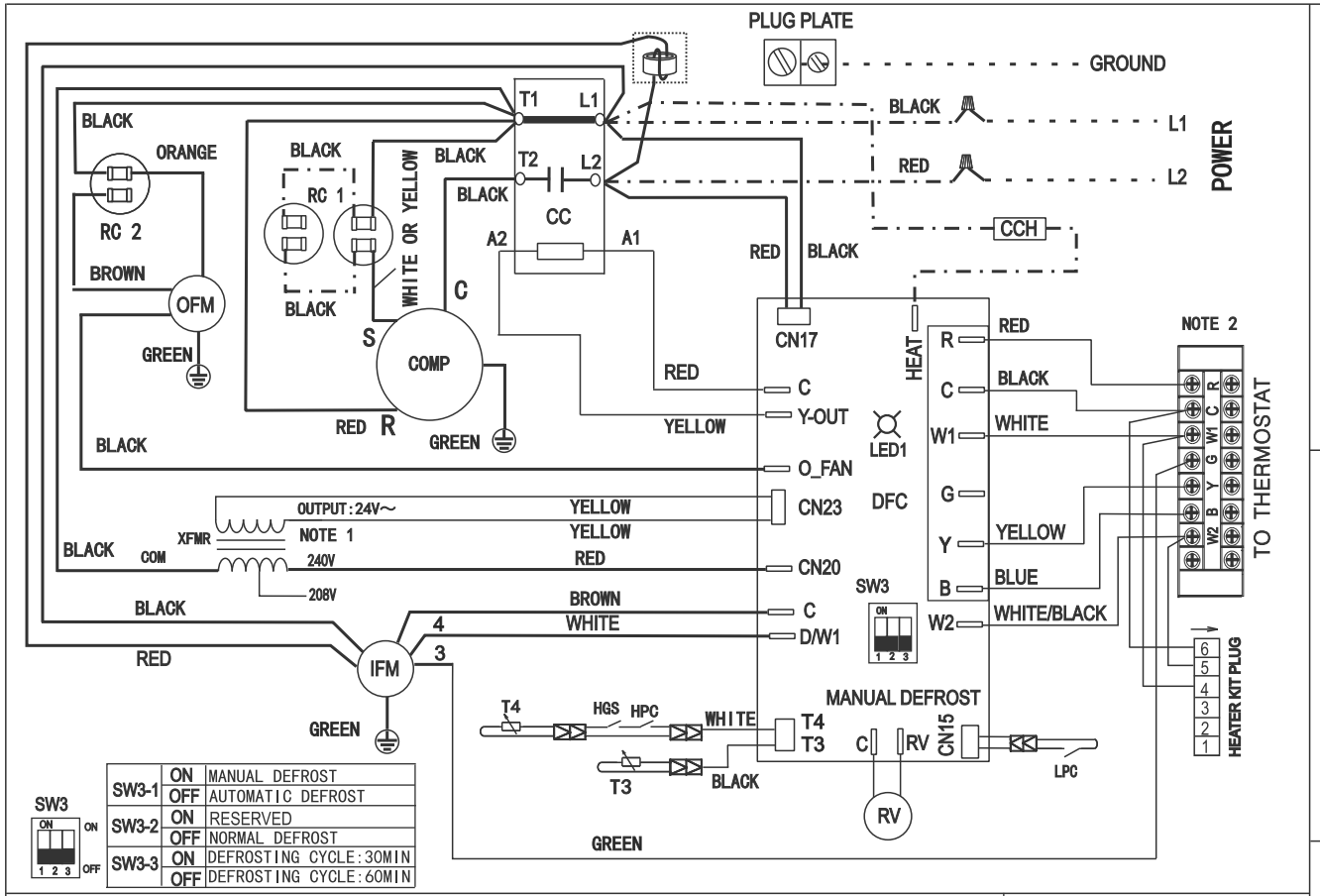

SW3-1	ON	MANUAL DEFROST
	OFF	AUTOMATIC DEFROST
SW3-2	ON	RESERVED
	OFF	NORMAL DEFROST
SW3-3	ON	DEFROSTING CYCLE:30MIN
	OFF	DEFROSTING CYCLE:60MIN

NOTES:
1: Remove the red lead from "240V" terminal and then connect the red lead to "208V" terminal on the transformer for 208 volts.
2: "W2" wire is not provided in some models.

R = 24V POWER
C= 24V COM
B= REVERSING VALVE
W1、W2= AUX HEAT IN DEFROST
Y= COMPRESSOR CONTACTOR
G=INDOOR FAN

CC	COMPRESSOR CONTACTOR
CCH	CRANKCASE HEATER
COMP	COMPRESSOR
DFC	DEFROST CONTROL
T4	AMBIENT TEMPERATURE
T3	PIPE TEMPERATURE
HPC	HIGH PRESSURE CUT-OUT CONTROL
LPC	LOW PRESSURE CUT-OUT CONTROL
OFM	OUTDOOR FAN MOTOR
RC 1	COMPRESSOR RUN CAPACITOR
RC 2	OUTDOOR FAN MOTOR RUN CAPACITOR
RV	REVERSING VALVE
GND	GROUND CHASSIS
HGS	HOT GAS OR COMPRESSOR TOP SENSOR
IFM	INDOOR FAN MOTOR

LINE VOLTAGE
FACTORY STANDARD
FIELD INSTALLED
FACTORY OPTIONAL

LOW VOLTAGE
FACTORY STANDARD
FIELD INSTALLED
FACTORY OPTIONAL

USE COPPER CONDUCTORS ONLY
WARNING :
CABINET MUST BE PERMANENTLY GROUNDED AND ALL WIRING TO CONFORM TO I.E.C, N.E.C, C.E.C, C.L.C, AND LOCAL CODES AS APPLICABLE
REPLACEMENT WIRE MUST BE THE SAME GAUGE AND INSULATION TYPE AS ORIGINAL WIRE.

- STEADY ON = NORMAL OPERATION
- OFF = DFC FAILURE
- 1 FLASH = T3 SENSOR FAILURE
- 2 FLASH = T4 SENSOR FAILURE / HPC OR HGS OPEN
- 3 FLASH = LPC OPEN

HP System Wiring Diagram (36):

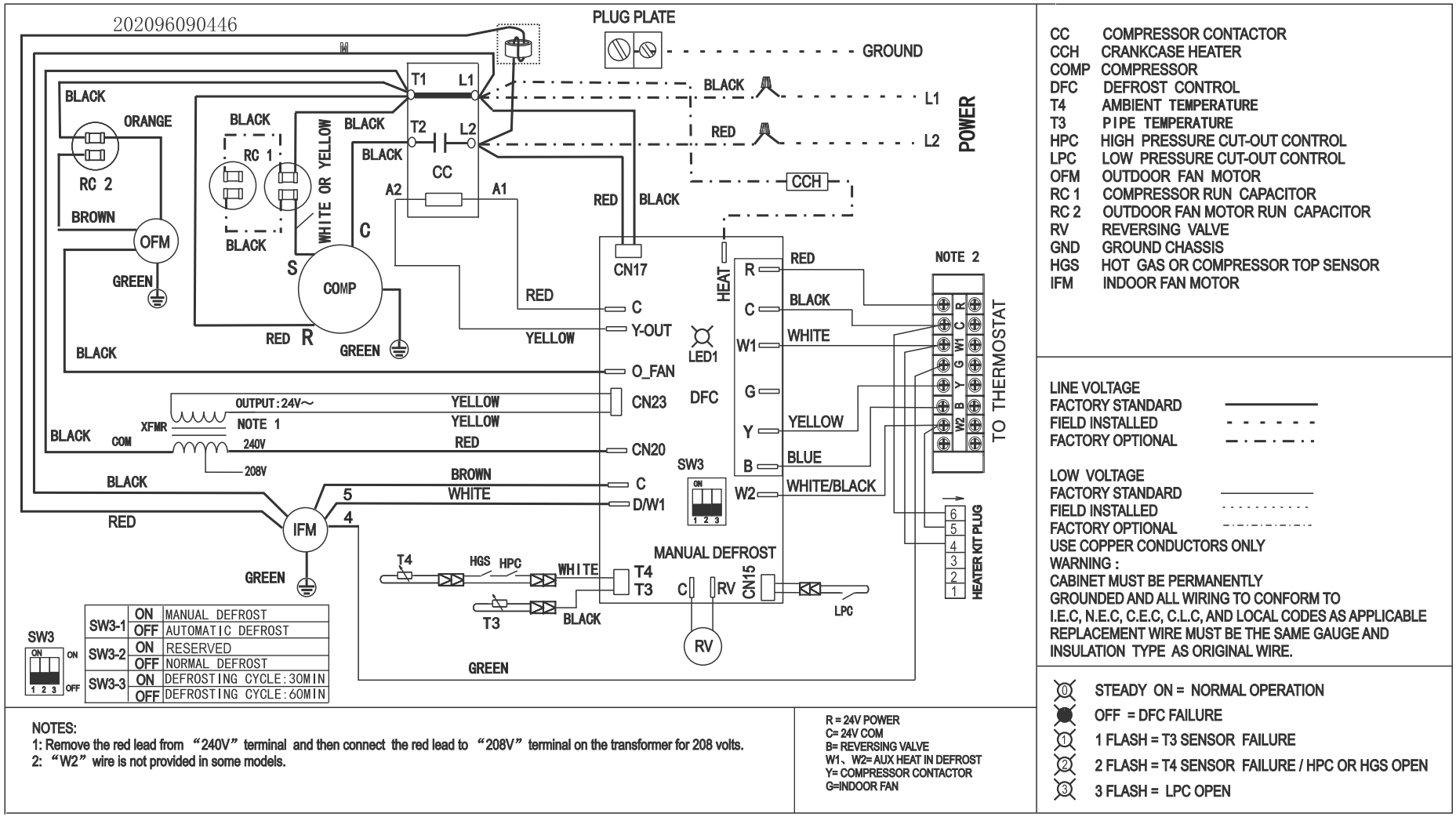

SW3-1	ON	MANUAL DEFROST
	OFF	AUTOMATIC DEFROST
SW3-2	ON	RESERVED
	OFF	NORMAL DEFROST
SW3-3	ON	DEFROSTING CYCLE:30MIN
	OFF	DEFROSTING CYCLE:60MIN

NOTES:
1: Remove the red lead from "240V" terminal and then connect the red lead to "208V" terminal on the transformer for 208 volts.
2: "W2" wire is not provided in some models.

R = 24V POWER
C= 24V COM
B= REVERSING VALVE
W1、W2= AUX HEAT IN DEFROST
Y= COMPRESSOR CONTACTOR
G=INDOOR FAN

CC	COMPRESSOR CONTACTOR
CCH	CRANKCASE HEATER
COMP	COMPRESSOR
DFC	DEFROST CONTROL
T4	AMBIENT TEMPERATURE
T3	PIPE TEMPERATURE
HPC	HIGH PRESSURE CUT-OUT CONTROL
LPC	LOW PRESSURE CUT-OUT CONTROL
OFM	OUTDOOR FAN MOTOR
RC 1	COMPRESSOR RUN CAPACITOR
RC 2	OUTDOOR FAN MOTOR RUN CAPACITOR
RV	REVERSING VALVE
GND	GROUND CHASSIS
HGS	HOT GAS OR COMPRESSOR TOP SENSOR
IFM	INDOOR FAN MOTOR

LINE VOLTAGE
FACTORY STANDARD
FIELD INSTALLED
FACTORY OPTIONAL

LOW VOLTAGE
FACTORY STANDARD
FIELD INSTALLED
FACTORY OPTIONAL

USE COPPER CONDUCTORS ONLY
WARNING :
CABINET MUST BE PERMANENTLY GROUNDED AND ALL WIRING TO CONFORM TO I.E.C, N.E.C, C.E.C, C.L.C, AND LOCAL CODES AS APPLICABLE REPLACEMENT WIRE MUST BE THE SAME GAUGE AND INSULATION TYPE AS ORIGINAL WIRE.

- STEADY ON = NORMAL OPERATION
- OFF = DFC FAILURE
- 1 FLASH = T3 SENSOR FAILURE
- 2 FLASH = T4 SENSOR FAILURE / HPC OR HGS OPEN
- 3 FLASH = LPC OPEN